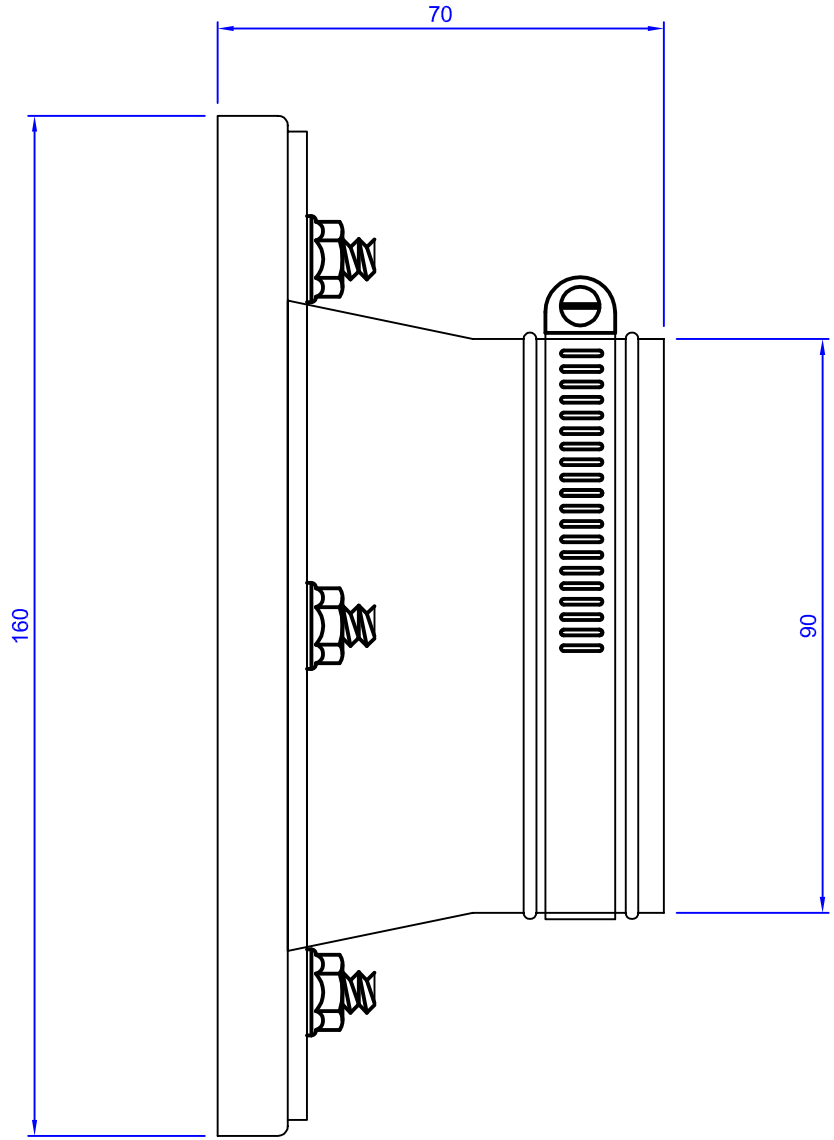

				DRAWN	JRH
				CHECKED	NMH
14/05	1	FIRST ISSUE	NMH	DATE	14/05/09
DATE	ISSUE	REASON FOR ISSUE	CHK'D	SCALE	1:1

TITLE

CTB-0300 CHAMBERTITE BOOT

MATERIAL

NBR

This drawing and any descriptive matter or information set out hereon, is the property of Forecourt Solutions Ltd who are the owners of the copyright, and must not be disclosed loaned, copied or used for manufacturing, tendering or for any other purpose without their written permission.

FORECOURT SOLUTIONS LTD
UNIT F, THISTLE PARK, CROSSWAYS ROAD,
SHOWGROUND BUSINESS PARK, BRIDGWATER
SOMERSET, TA6 6LS, UK
TEL:+44 1278428833, FAX: +44 1278 459808

DRAWING NUMBER

CTB-0300